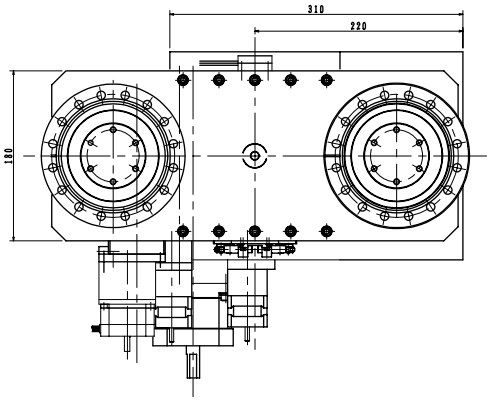

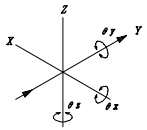

<TM Mirror Manipurator>

Axis	Range	Resolution
X	±5mm	1μm
Z	±10mm	0.5μm
Yaw	±1°	0.16°
Roll	±1°	0.18°
Pitch	±1°	0.225°

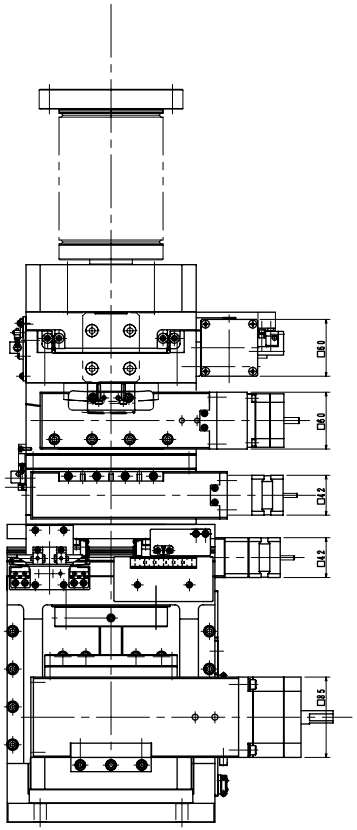

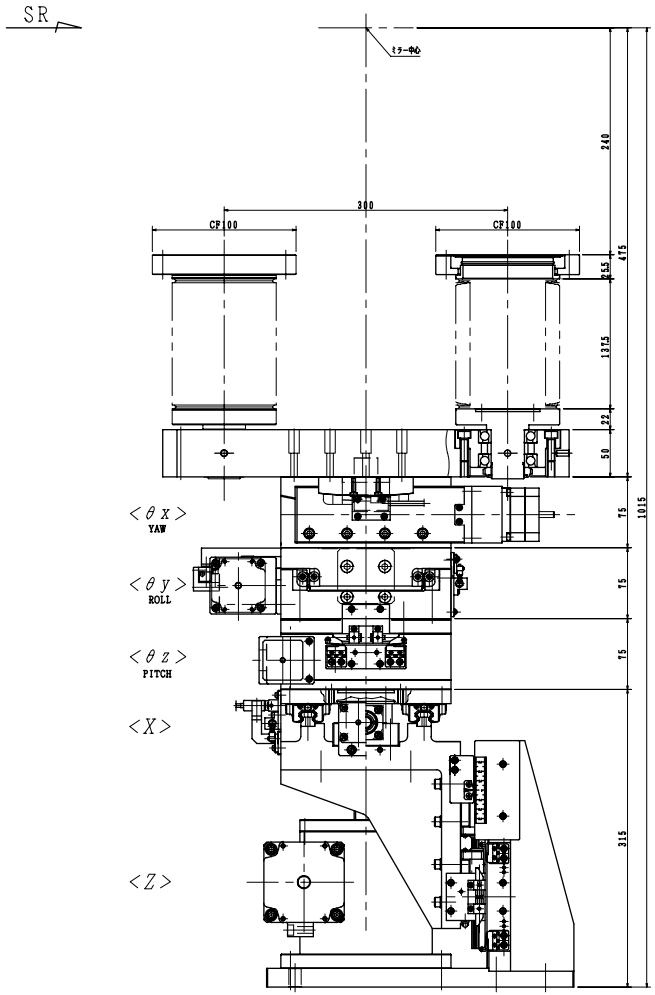

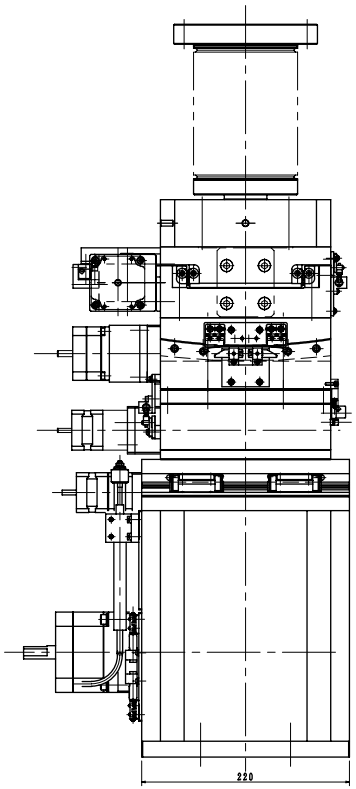

TM manipulator of BOREAS beamline

UNIT:mm

CHECKED BY	DESIGNED BY	DRAWN BY	TITLE ALBA XMCD BEAMLINE TM MIRROR MANIPURATOR
Hatanaka 08-07-28	Akiyama 08-07-28	Akiyama 08-07-28	
TOYAMA CO.,LTD		SCALE 1:5	DWG No. 0AF-00219